INTRODUCTION TO FLUID MECHANICS

Department of Chemical Engineering

CHEM ENG 2O04
Course Notes

Fluid "Statics"

Fox & McDonald
10th & 9th editions: 2.5, 3.1 to 3.3, 3.5

Barnes & Gentle - Chapter 2
2.2, 2.3

Uses γ instead of σ for surface tension

"Never be limited by other people's limited imaginations...If you adopt their attitudes, then the possibility won't exist because you'll have already shut it out...You can hear other people's wisdom, but you've got to re-evaluate the world for yourself."

"The best way to make dreams come true is to wake up."

Mae Jemison

(has B.S. degree in chemical engineering from Stanford University)

Pressure

- Force per unit area (N/m^2 [=] Pa) related to fluid molecular bombardment of a surface
- Values MUST be stated with respect to a reference level – three measurement methods:

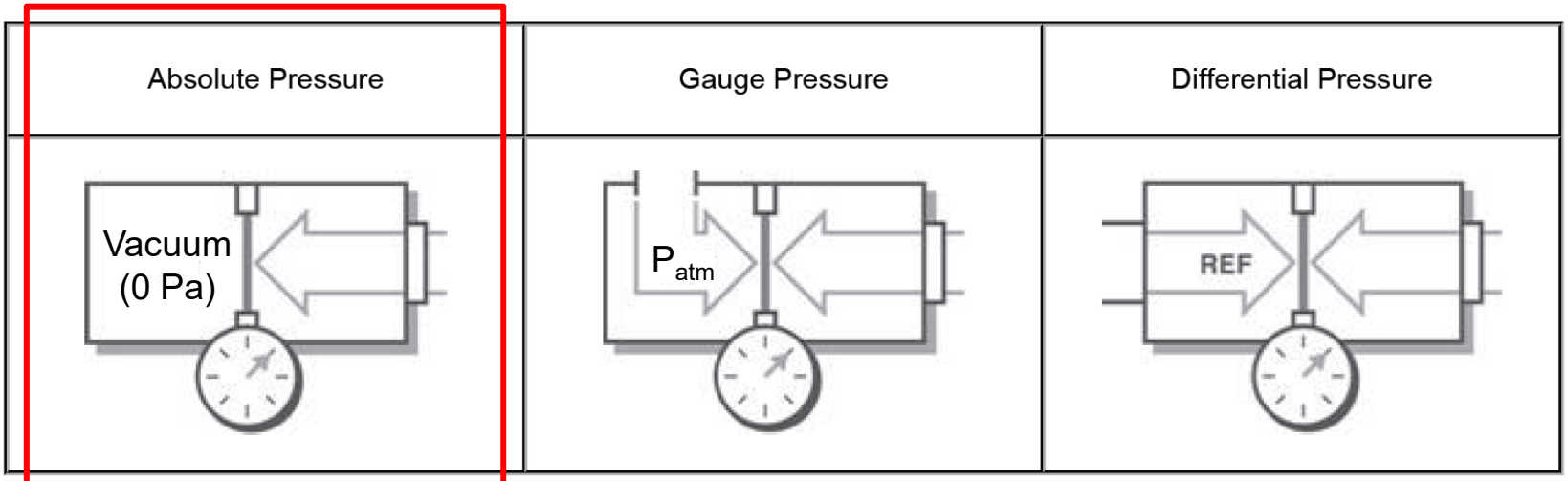

Figure 1. Pressure Sensor Diagrams for Different Measurement Methods

Absolute pressures MUST be used in all calculations with the ideal gas law and other equations of state

Pressure

- Force per unit area (N/m^2 [=] Pa) related to fluid molecular bombardment of a surface
- Values MUST be stated with respect to a reference level –

three measurement methods:

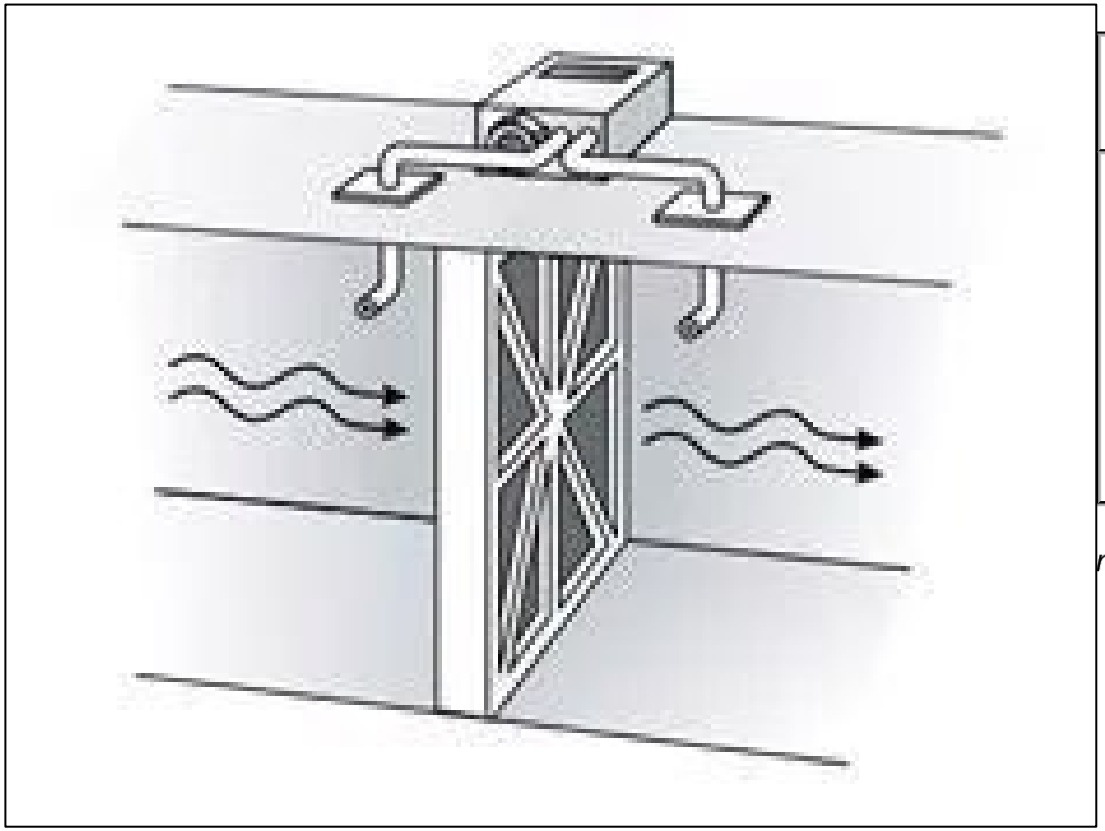

Air Filter with Differential Pressure Sensing System

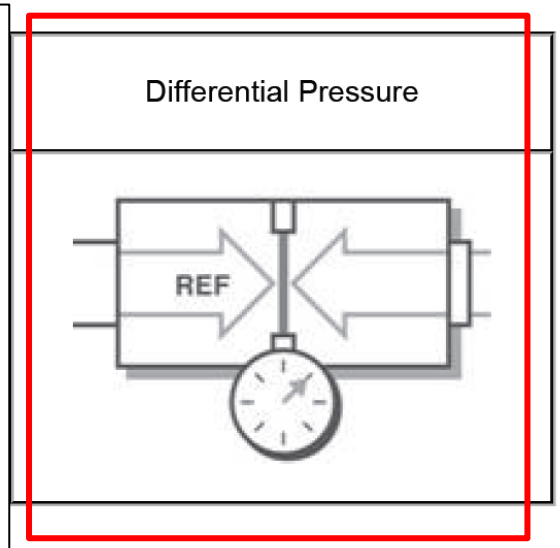

rement Methods

Pressure conversion factors

Unit	Abbreviation	Equivalent number of pascals
Atmosphere	atm	1 atm = 101,325 Pa
Bar	bar	1 bar = 100,025 Pa
Millimeter of mercury	mmHg	1 mmHg = 133.322 Pa
Inches of mercury	inHg	1 inHg = 3386 Pa
Pascal	Pa	1
Kilopascal	kPa	1 kPa=1000 Pa
Pounds per square inch	psi	1 psi = 6,893 Pa
Torr	torr	1 torr = 133.322 Pa

Physiological pressures

Blood pressure:

Normal systolic = 120 mmHg
Normal diastolic = 80 mmHg

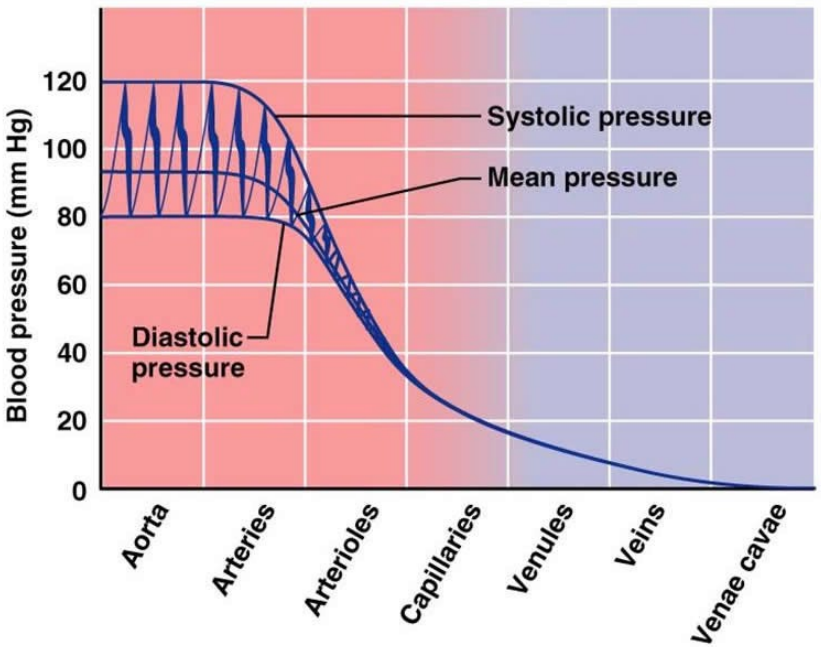

Intraocular pressure (IOP):

Normal eye pressure ranges from 12 to 22 mmHg

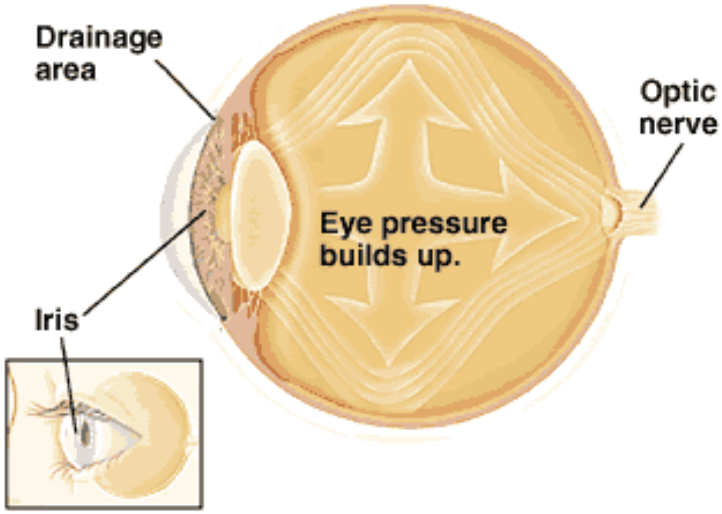

Ocular hypertension = IOP is higher than normal

Absolute vs Gauge Pressures

- Gauge pressure = pressure measured with respect to atmospheric pressure:

$$P_{gauge} = P_{absolute} - P_{atmosphere}$$

Pressure exerted by the atmosphere on the earth's surface - depends on temperature, altitude, and weather conditions

At sea level & 15 ^{o}C, $P_{atmosphere}$ = 101325 Pa
= 14.696 psi

Fig. 3.2

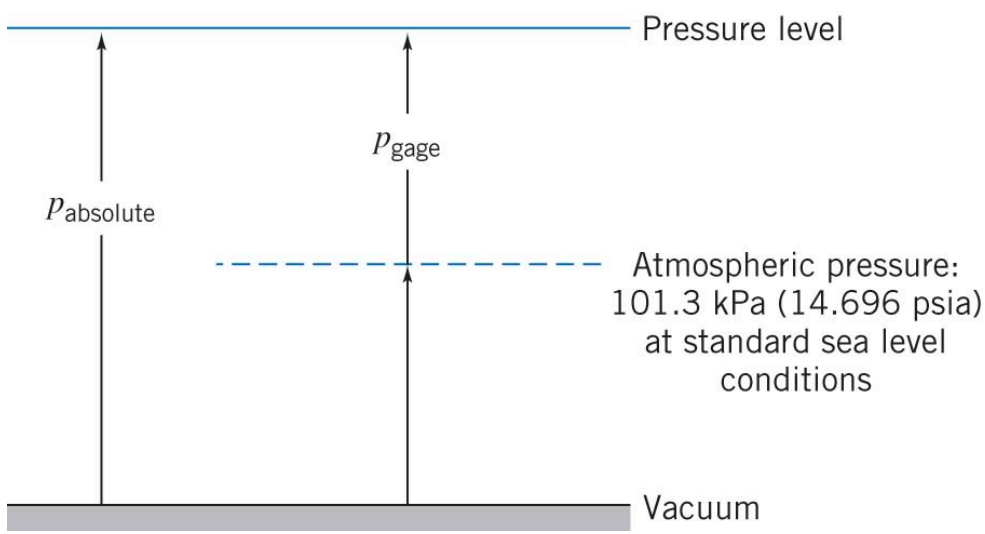

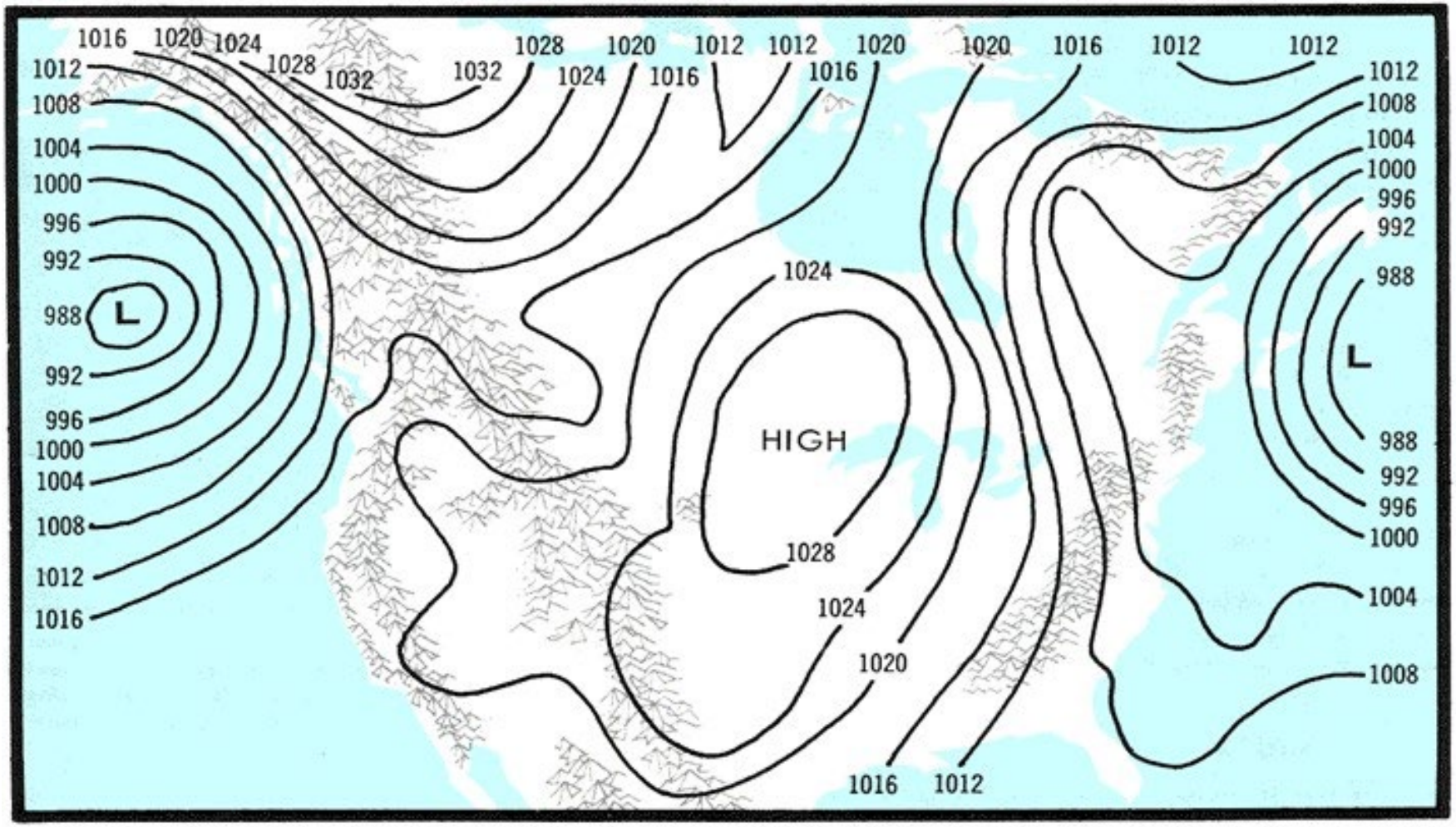
1016
1020
1024
1028
1032
1032
1028
1024
1020
1016
1012
1012
1016
1020
1020
1016
1012
1012
1012
1008
1004
1000
996
992
988
L
992
996
1000
1004
1008
1012
1016
1024
HIGH
1028
1024
1020
1016
1012
1012
1008
1004
1000
996
992
988
L
988
992
996
1000
1004
1008

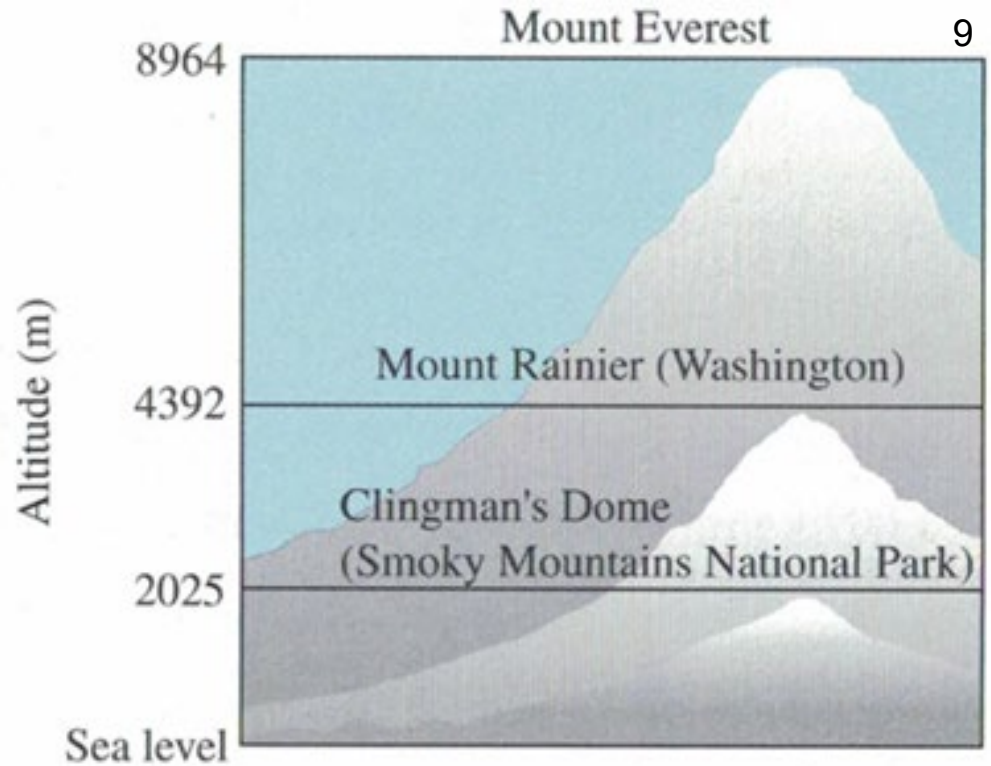

Elevation (m)	Atmospheric Pressure (kPa)
4400	
1600	
100	
10	

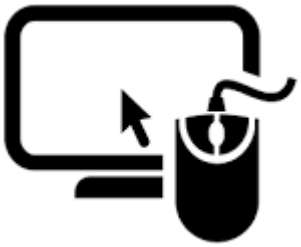

PIPE-FLO Demo

According to Wikipedia:
"In Denver, Colorado, USA, which is at an elevation of about one mile, water boils at approximately 95 °C or 203 °F."

Table A.8

Properties of Water (SI Units)

Temperature, T (°C)	Density, ρ (kg/m^3)	Dynamic Viscosity, μ (N · s/m^2)	Kinematic Viscosity, ν (m^2/s)	Surface Tension, σ (N/m)	Vapor Pressure, p_v (kPa)	Bulk Modulus, E_v (GPa)
0	1000	1.76E-03	1.76E-06	0.0757	0.661	2.01
5	1000	1.51E-03	1.51E-06	0.0749	0.872	
10	1000	1.30E-03	1.30E-06	0.0742	1.23	
15	999	1.14E-03	1.14E-06	0.0735	1.71	
20	998	1.01E-03	1.01E-06	0.0727	2.34	2.21
25	997	8.93E-04	8.96E-07	0.0720	3.17	
30	996	8.00E-04	8.03E-07	0.0712	4.25	
35	994	7.21E-04	7.25E-07	0.0704	5.63	
40	992	6.53E-04	6.59E-07	0.0696	7.38	
45	990	5.95E-04	6.02E-07	0.0688	9.59	
50	988	5.46E-04	5.52E-07	0.0679	12.4	2.29
55	986	5.02E-04	5.09E-07	0.0671	15.8	
60	983	4.64E-04	4.72E-07	0.0662	19.9	
65	980	4.31E-04	4.40E-07	0.0654	25.0	
70	978	4.01E-04	4.10E-07	0.0645	31.2	
75	975	3.75E-04	3.85E-07	0.0636	38.6	
80	972	3.52E-04	3.62E-07	0.0627	47.4	
85	969	3.31E-04	3.41E-07	0.0618	57.8	
90	965	3.12E-04	3.23E-07	0.0608	70.1	2.12
95	962	2.95E-04	3.06E-07	0.0599	84.6	
100	958	2.79E-04	2.92E-07	0.0589	101	

Elevation (m)	Atmospheric Pressure (kPa)
4400	58.49
1600	**83.52**
100	100.1
10	101.2

Basic Equation of Fluid Statics

Objective = Determine the pressure distribution in a static (i.e. motionless) body of fluid in which only gravity acts as a body force

- Apply force equilibrium to a differential fluid element of mass with sides of length Δx, Δy, and Δz:
- Let P be the pressure at the origin O
- Gravity acts in '–z' direction

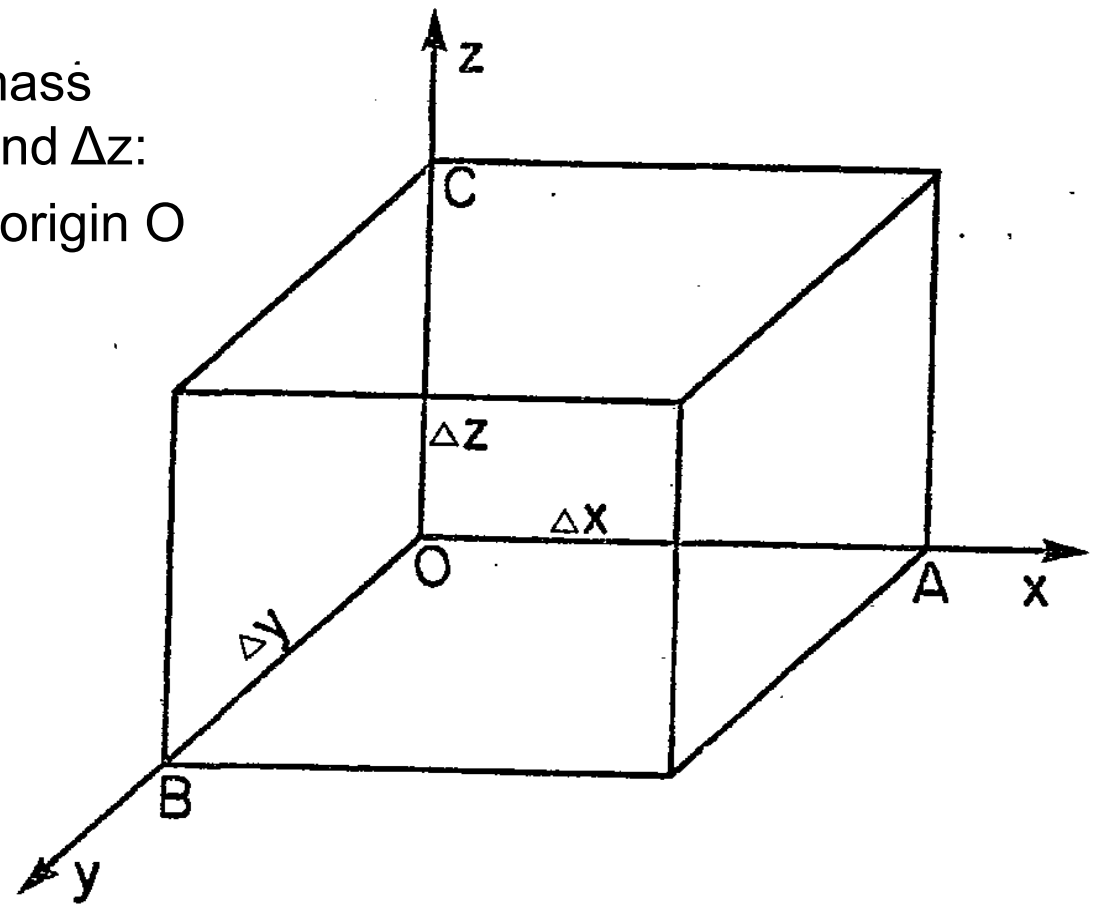

Basic Equation of Fluid Statics

The principle of static equilibrium states that the sum of forces in any direction must be zero

"Pressure force" at each face = pressure × area

Use a **Taylor Series Expansion** (but just the first two terms….so ignoring the higher order (i.e. quadratic, cubic) terms) of the pressure about point O:

- Pressure at the right face (position A) = $P + \frac{\partial P}{\partial x}\Delta x$
- Pressure at the front face (position B) = $P + \frac{\partial P}{\partial y}\Delta y$
- Pressure at the top face (position C) = $P + \frac{\partial P}{\partial z}\Delta z$

Taylor Series Expansion

$$f(x) \approx f(a) + f'(a)(x-a).$$

This linear approximation fits $f(x)$ (shown in green below) with a line (shown in blue) through $x = a$ that matches the slope of f at a.

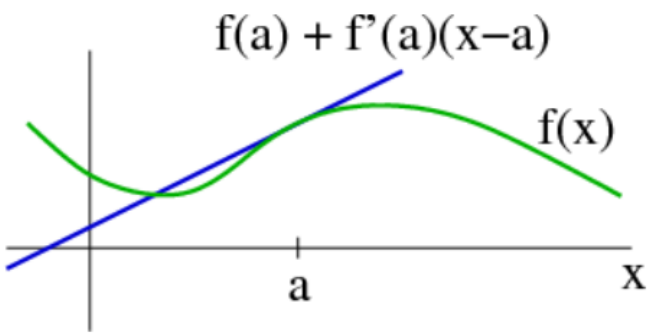

We can add additional, higher-order terms, to approximate $f(x)$ better near a. The best quadratic approximation is

$$f(x) \approx f(a) + f'(a)(x-a) + \frac{1}{2}f''(a)(x-a)^2$$

We could add third-order or even higher-order terms:

$$f(x) \approx f(a) + f'(a)(x-a) + \frac{1}{2}f''(a)(x-a)^2 + \frac{1}{6}f'''(a)(x-a)^3 + \cdots.$$

The important point is that this *Taylor polynomial* approximates $f(x)$ well for x near a.

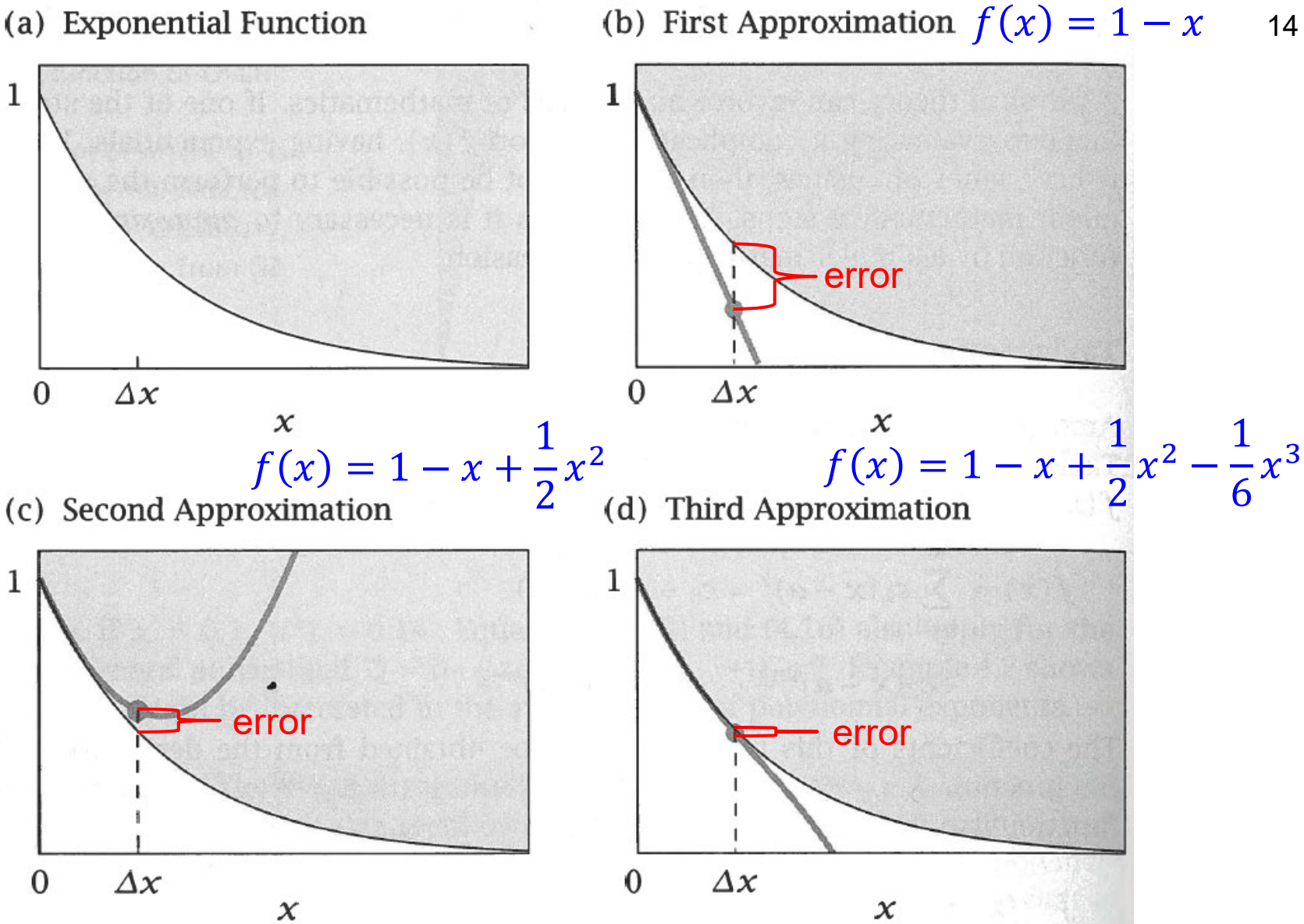

Figure 4.2 Use the Taylor series to find values of $f(x) = e^{-x}$ for $x = \Delta x$ near $x = 0$. (a) The first term in the Taylor series is $f(0) = 1$. (b) The gray line is the first approximation, $f(x) \approx 1 - x$. (c) The second approximation is $f(x) \approx 1 - x + x^2/2$. (d) The third approximation is $f(x) \approx 1 - x + (x^2/2) - (x^3/6)$.

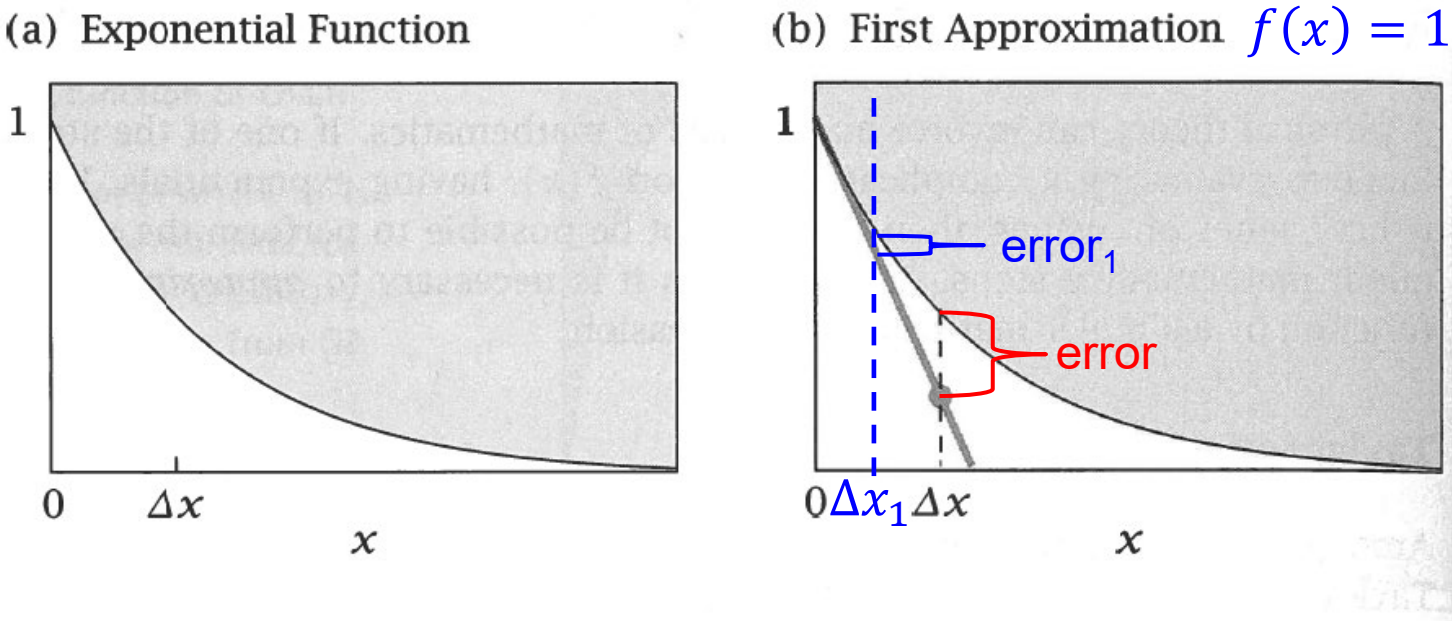

Figure 4.2 Use the Taylor series to find values of $f(x) = e^{-x}$ for $x = \Delta x$ near $x = 0$. (a) The first term in the Taylor series is $f(0) = 1$. (b) The gray line is the first approximation, $f(x) \approx 1 - x$. (c) The second approximation is $f(x) \approx 1 - x + x^2/2$. (d) The third approximation is $f(x) \approx 1 - x + (x^2/2) - (x^3/6)$.

Basic Equation of Fluid Statics

In the x-direction: $\sum F_X = 0$

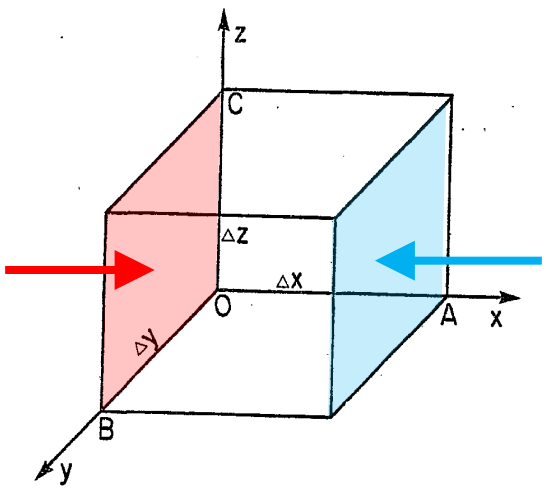

$$F_{left-face} - F_{right-face} = 0$$

$$P_{left-face} \cdot A_{left-face} - P_{right-face} \cdot A_{right-face} = 0$$

$$P \cdot \Delta y \Delta z - \left(P + \frac{\partial P}{\partial x} \Delta x \right) \cdot \Delta y \Delta z = 0$$

$$\frac{\partial P}{\partial x} = 0$$

Basic Equation of Fluid Statics

In the y-direction: $\sum F_y = 0$

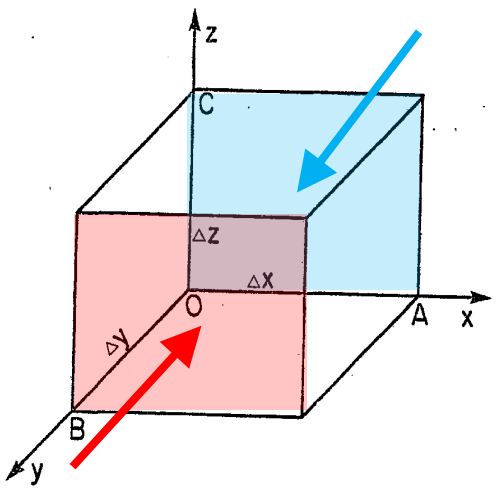

$$F_{back-face} - F_{front-face} = 0$$

$$P_{back-face} \cdot A_{back-face} - P_{front-face} \cdot A_{front-face} = 0$$

$$P \cdot \Delta x \Delta z - \left(P + \frac{\partial P}{\partial y} \Delta y \right) \cdot \Delta x \Delta z = 0$$

$$\frac{\partial P}{\partial y} = 0$$

Basic Equation of Fluid Statics

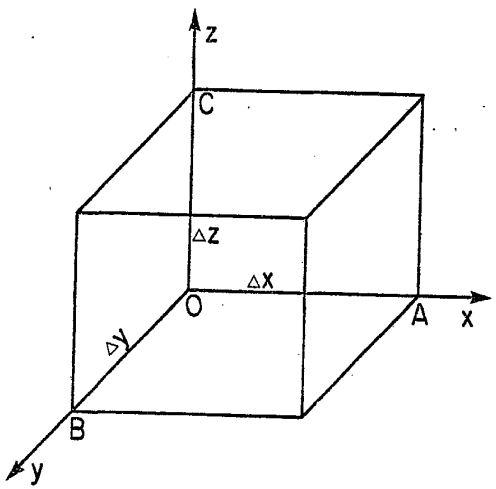

$$\frac{\partial P}{\partial x} = 0$$

$$\frac{\partial P}{\partial y} = 0$$

The pressure is the same at all points on a horizontal plane in a given fluid <u>provided that the points are interconnected by the same fluid</u>!

Basic Equation of Fluid Statics

In the z-direction: $\sum F_Z = 0$

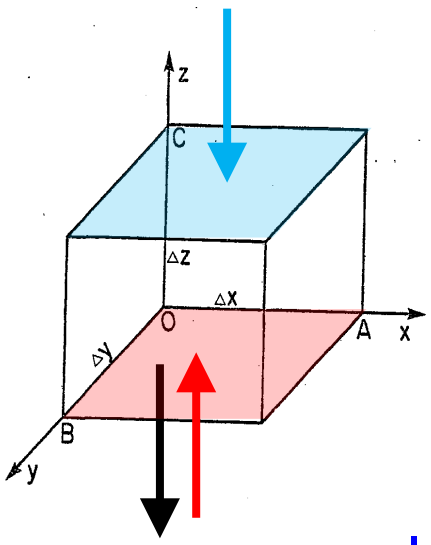

$$F_{bottom-face} - F_{top-face} - W = 0$$

$$P \cdot \Delta x \Delta y - \left(P + \frac{\partial P}{\partial z}\Delta z\right) \cdot \Delta x \Delta y - \rho(\Delta x \Delta y \Delta z) g = 0$$

$$\boxed{\frac{dP}{dz} = -\rho g}$$

Eqn 3.6

In a continuously distributed, uniform, static fluid:

- P varies only with vertical distance and is independent of shape of container ("hydrostatic paradox")
- P is same at all points on a given horizontal plane of fluid

Incompressible liquids

For incompressible fluid, ρ = constant

$$\frac{dP}{dz} = -\rho g \qquad \text{Eqn 3.6}$$

$$\int dP = \int -\rho g dz$$

$$\int dP = -\rho g \int dz$$

$$P_2 - P_1 = -\rho g (z_2 - z_1)$$

Pressure increases linearly with fluid depth

Often convenient to take origin at the free surface and measure fluid distances, h, as positive downward from the free surface:

$$P = P_{atm} + \rho_{water} g h$$

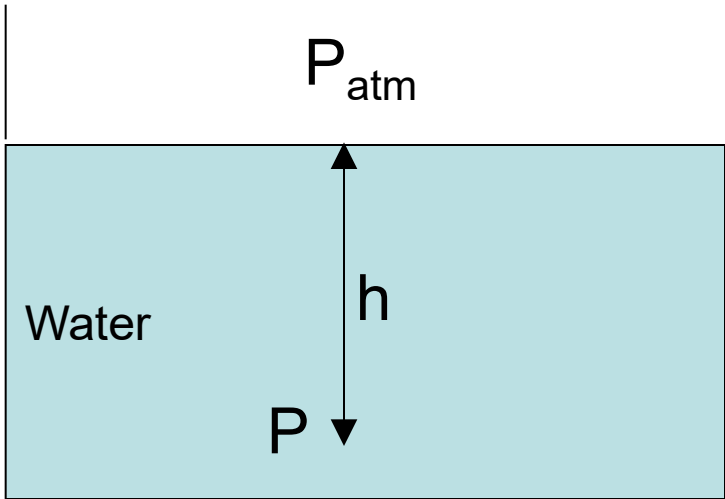

‘Liquid height’ pressure

Pressure units are frequently given as heights of a column of liquid:

$$\rho g h [=] \frac{kg}{m^3} \frac{m}{s^2} m [=] \frac{kg}{m \cdot s^2} [=] \frac{kg \cdot m}{s^2} \frac{1}{m^2} [=] N \frac{1}{m^2} [=] Pa$$

The height is called ‘pressure head’

Pressure:	1 psi = 6.895 kPa
	1 lbf/ft^2 = 47.88 Pa
	1 atm = 101.3 kPa
	1 atm = 14.7 psi
	1 in. Hg = 3.386 kPa
	1 mm Hg = 133.3 Pa
Energy:	1 Btu = 1.055 kJ
	1 ft · lbf = 1.356 J
	1 cal = 4.187 J

Hydrostatic Equation

For the pressurized tank with Bourdon-tube gauges tapped into it:

a. What is the specific gravity of the oil?

b. What is the expected pressure reading on gauge C?

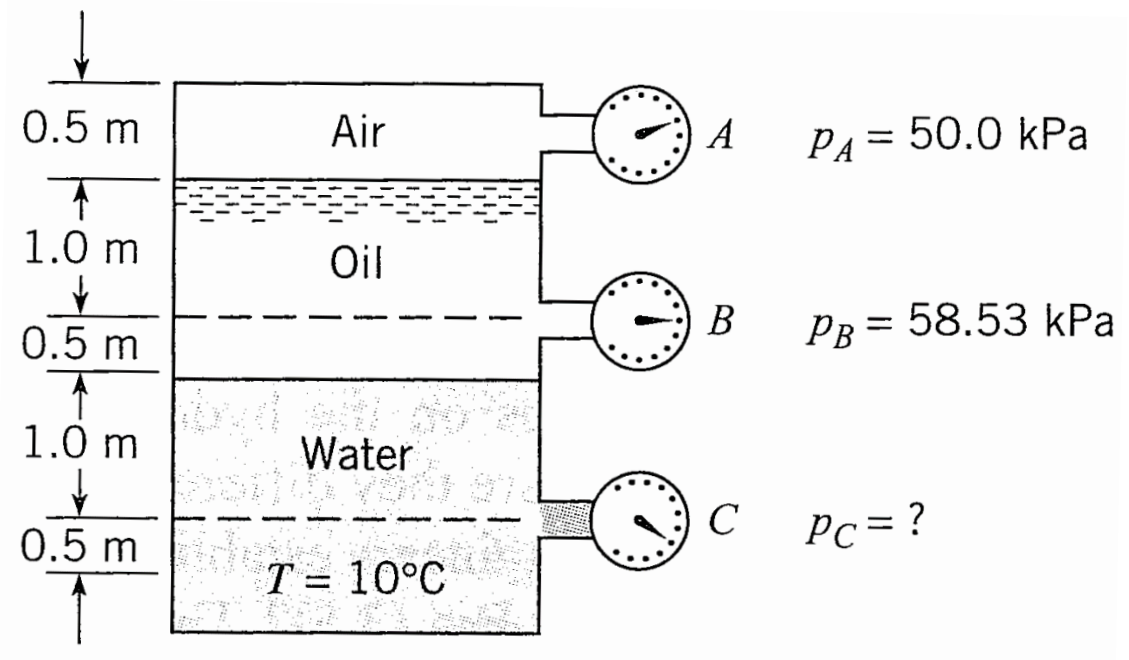

Buoyancy

Figure 3.9

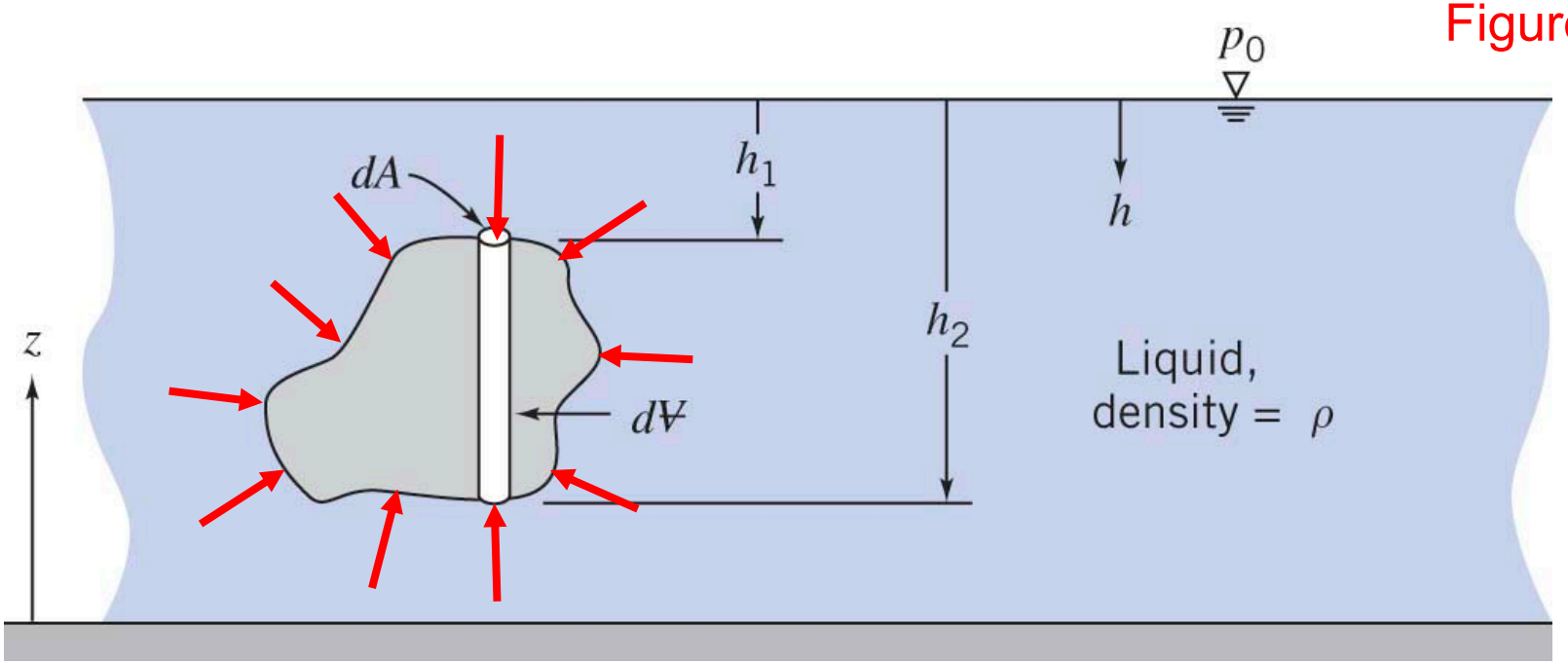

- Pressure is compressive (i.e. acts inwards on the submerged object)

Buoyancy

- Consider a small cylindrical section of an object totally immersed in a static liquid – the resulting forces are:

$$F_{top-face} = Pressure_{top-face} * Area_{top-face}$$

$$F_{top-face} = \left(P_O + \rho_{fluid} g h_1\right) dA$$

$$F_{bottom-face} = Pressure_{bottom-face} * Area_{bottom-face}$$

$$F_{bottom-face} = \left(P_O + \rho_{fluid} g h_2\right) dA$$

Since $h_2 > h_1$, then $F_{bottom\text{-}face} > F_{top\text{-}face}$, and thus **<u>there is net force acting up</u>** with magnitude:

$$= \rho_{fluid} g (h_2 - h_1) dA$$
$$= \rho_{fluid} g \cdot d\forall_{object}$$

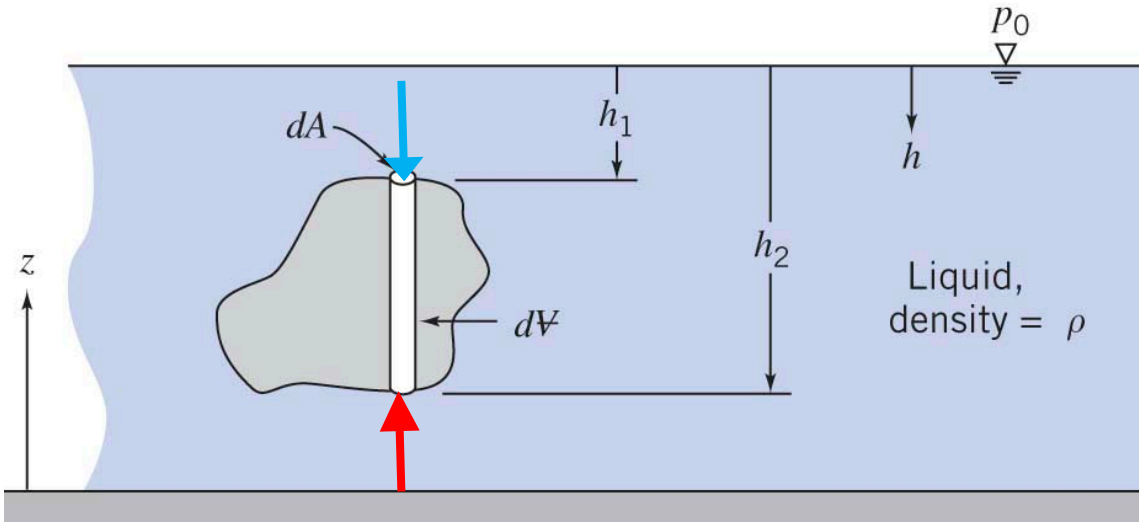

Buoyancy

Since $h_2 > h_1$, then $F_{bottom\text{-}face} > F_{top\text{-}face}$, and thus there is net force acting up with magnitude:

$$= \rho_{fluid} g \cdot d\forall_{object}$$

Integrating over the entire surface of the object gives the total buoyancy force acting on the object:

$$\boxed{F_{buoyancy} = \rho_{fluid} g \forall_{object}}$$ Eqn 3.16

For a submerged body, **the buoyancy force of the fluid is equal to the weight of displaced fluid**

NOTE: No dependence on position in the fluid!!

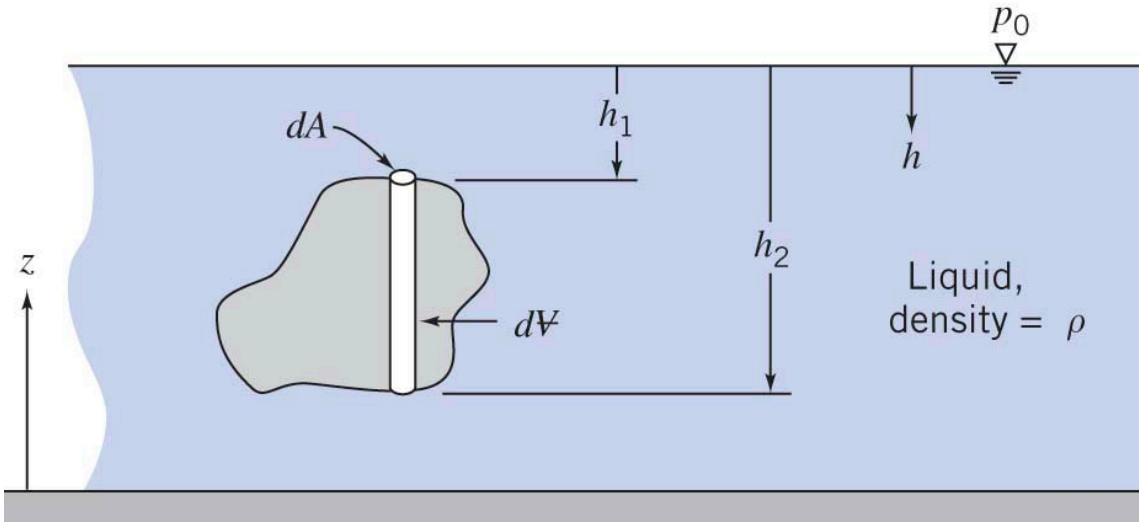

https://www.youtube.com/watch?time_continue=1&v=917UC2MZOGU&feature=emb_logo

A 10 cm diameter steel (SG = 7.83) ball is suspended by a string in a vessel filled with two liquids, water and carbon tetrachloride. The fluids are immiscible and form two layers: the bottom layer is 30 cm deep and the top layer is 35 cm deep.

1. Draw a diagram of the process with the two layers labelled as the appropriate fluids.
2. Draw a force diagram on the ball (hint: there are three forces due to gravity, buoyancy, and tension)
3. Calculate the tension in the string when the ball is completely submerged in carbon tetrachloride. (Answer = 32.0 N)
4. Calculate the tension in the string when the ball is submerged half in water and half in carbon tetrachloride. (Answer = 33.5 N)
5. Calculate the tension in the string when the ball is submerged half in the top layer and half in air (i.e., the gas above the top layer). (Answer = 37.6 N)

Buoyant density centrifugation (aka density gradient centrifugation) for separating biomolecules (proteins, DNA, viruses)

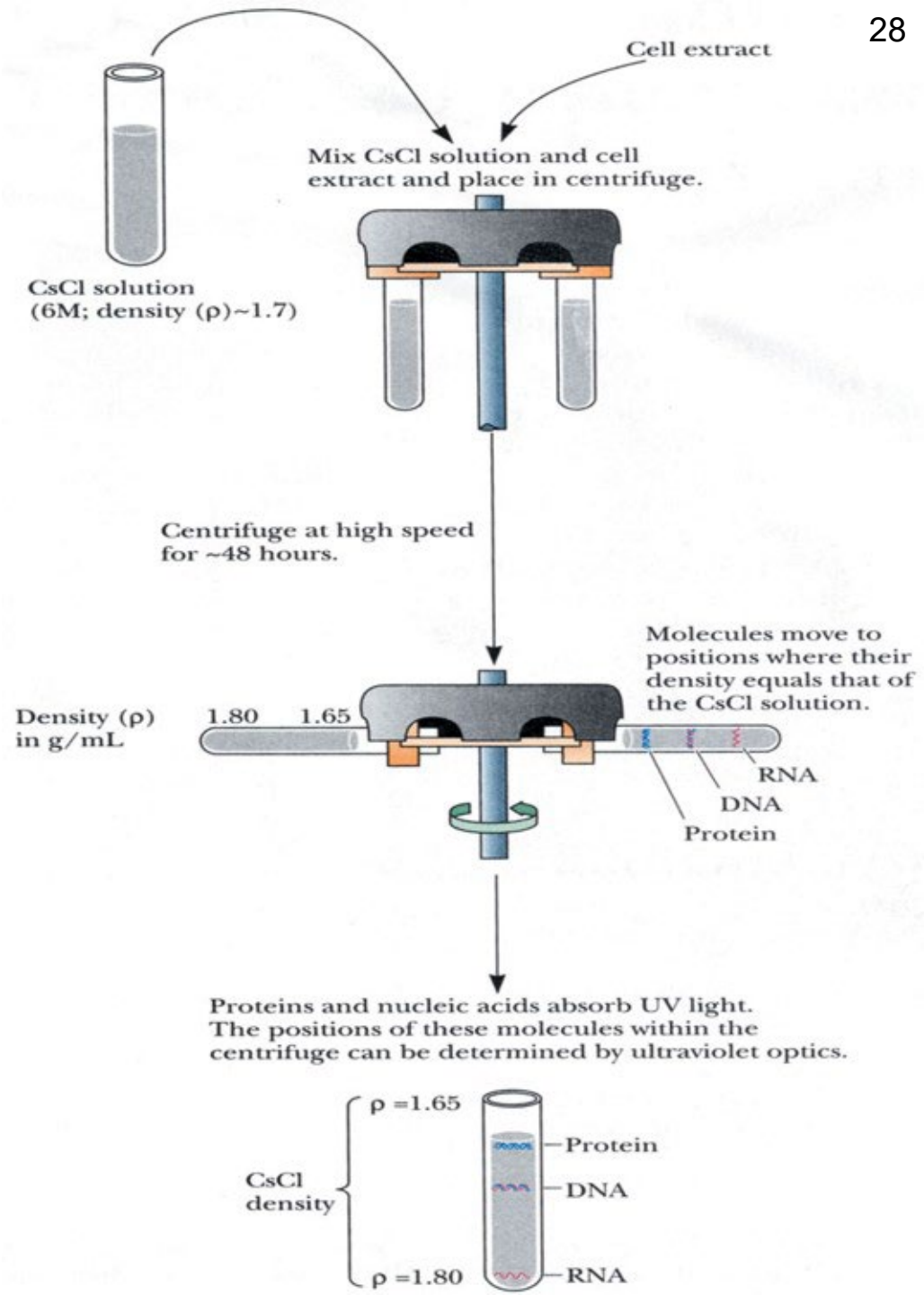

Molecular Therapy
Methods & Clinical Development
Protocol

Helper-free Production of Laboratory Grade AAV and Purification by Iodixanol Density Gradient Centrifugation

Sean M. Crosson,[1] Peter Dib,[2] J. Kennon Smith,[3] and Sergei Zolotukhin[1]

[1]Department of Pediatrics, Division of Cell and Molecular Therapy, University of Florida, Gainesville, FL, USA; [2]Department of Anatomy and Cell Biology, University of Florida, Gainesville, FL, USA; [3]Department of Biochemistry and Molecular Biology, University of Florida, Gainesville, FL, USA

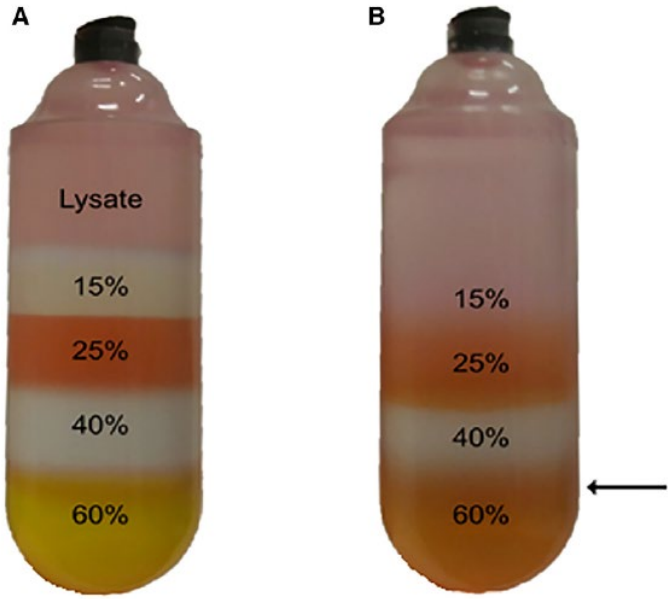

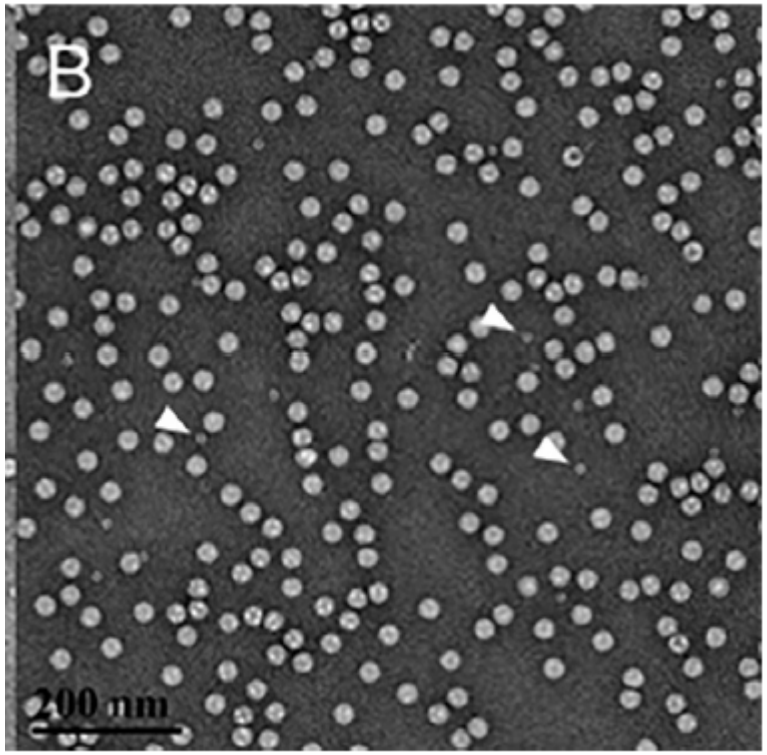

Figure 1. Iodixanol Gradient Centrifugation of AAV Preparation
AAV iodixanol density gradient before (A) and after (B) ultracentrifugation. 25% and 60% fractions have 10 ng/mL phenol red added to help with visualization. The black arrow marks the needle injection site for AAV aspiration from the 40%–60% interface.

Molecular Therapy
Methods & Clinical Development
Protocol

AMERICAN SOCIETY of GENE & CELL THERAPY

Helper-free Production of Laboratory Grade AAV and Purification by Iodixanol Density Gradient Centrifugation

Sean M. Crosson,[1] Peter Dib,[2] J. Kennon Smith,[3] and Sergei Zolotukhin[1]

[1]Department of Pediatrics, Division of Cell and Molecular Therapy, University of Florida, Gainesville, FL, USA; [2]Department of Anatomy and Cell Biology, University of Florida, Gainesville, FL, USA; [3]Department of Biochemistry and Molecular Biology, University of Florida, Gainesville, FL, USA

Adeno-associated virus (AAV) has been engineered to have very specific functionality in gene therapy applications.

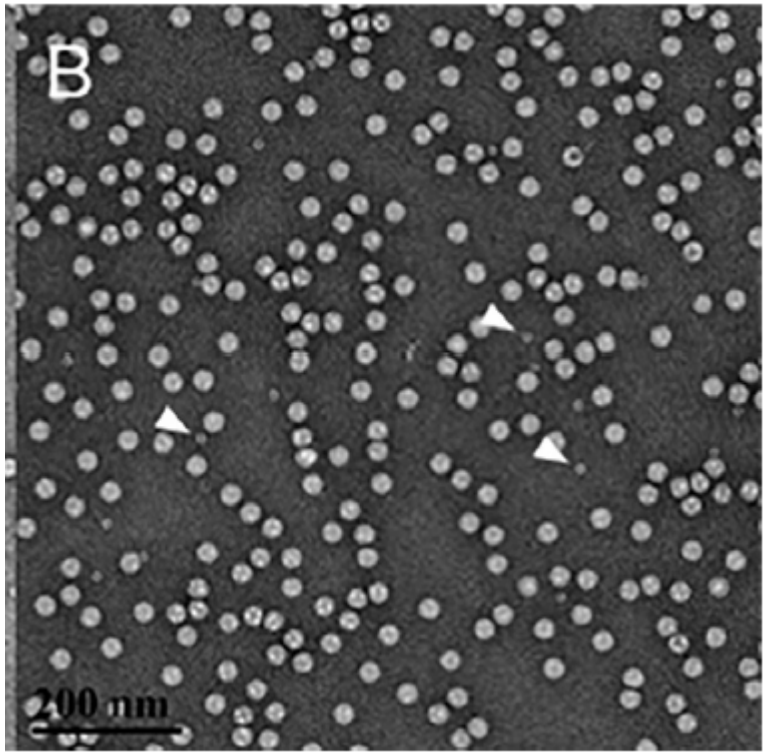

'Capillarity'

- A small diameter tube, open at both ends, is lowered vertically into a liquid:
  - If $\theta < 90^o$, the level inside the tube will rise

Fig. 2.12

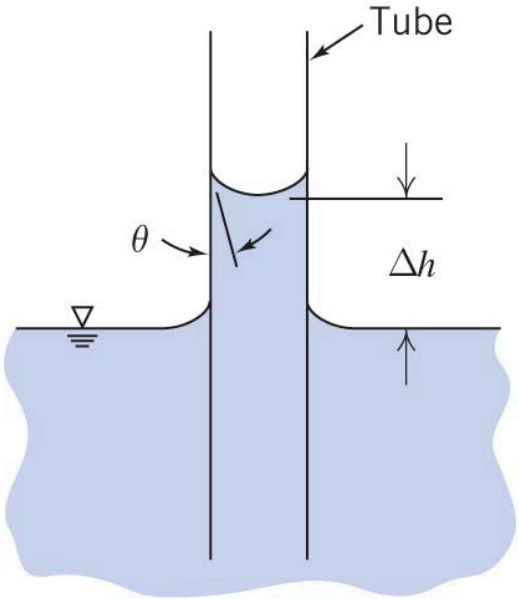

(a) Capillary rise ($\theta < 90°$)

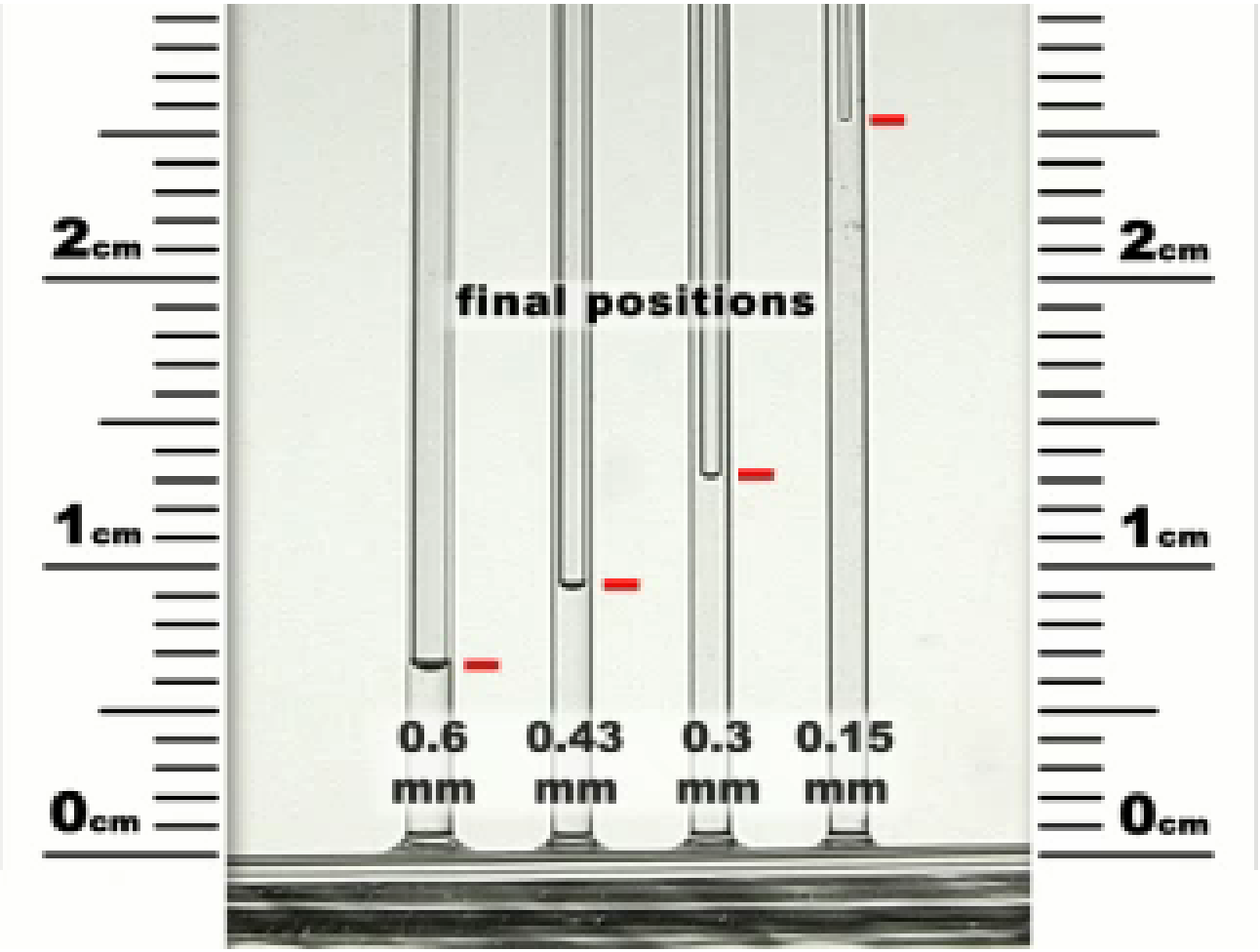

Click here for video

Wolfram Demonstrations Project

Click here for demo

Capillary Action

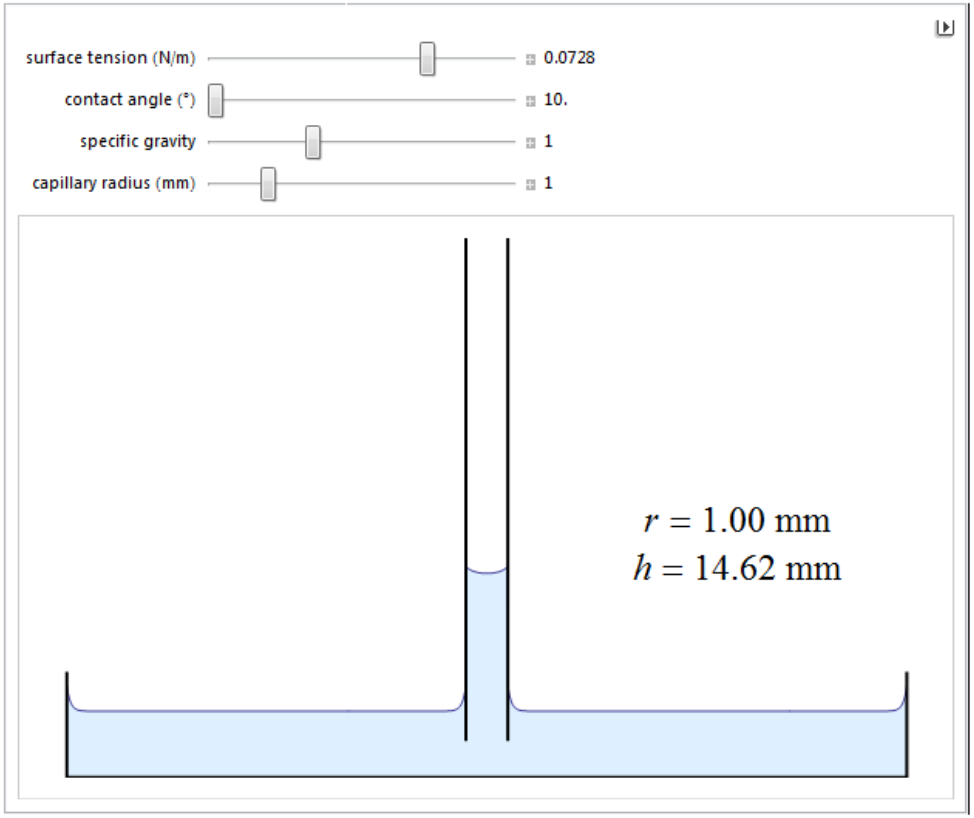

Link to download CDF player:

http://demonstrations.wolfram.com/download-cdf-player.html

'Capillarity'

- A small diameter tube, open at both ends, is lowered vertically into a liquid:
  - If $\theta < 90^o$, the level inside the tube will rise
  - If $\theta = 90^o$, the level inside the tube will not change
  - If $\theta > 90^o$, the level inside the tube will drop

Fig. 2.12

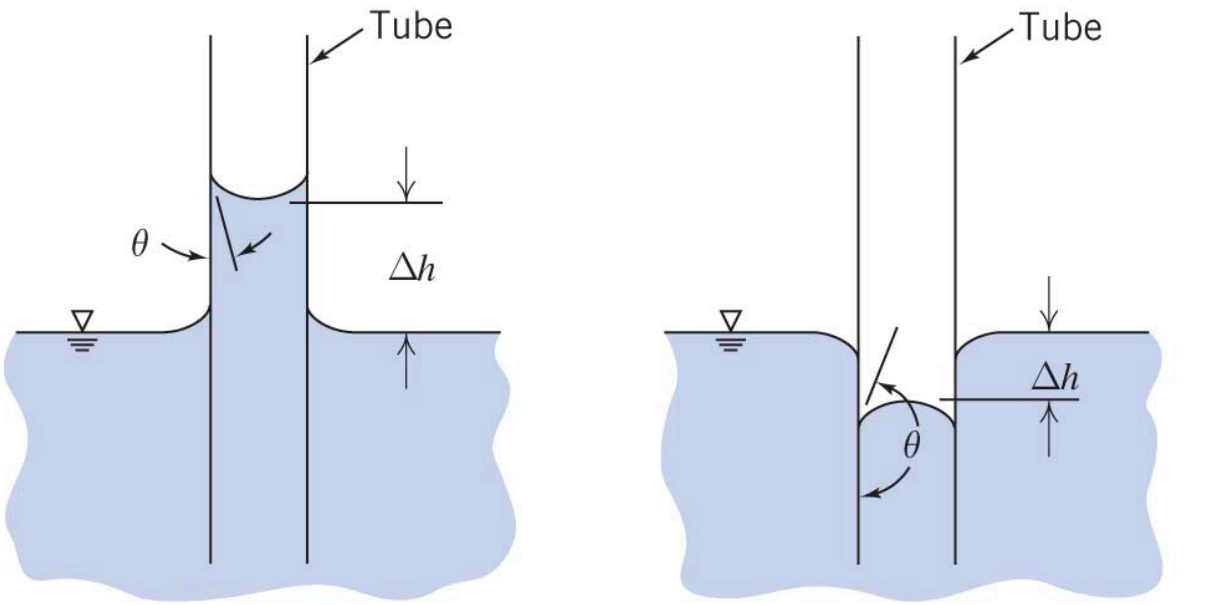

(a) Capillary rise ($\theta < 90°$)

(b) Capillary depression ($\theta > 90°$)

'Capillarity'

Review Example 2.3 in the textbook!!

- A small diameter tube, open at both ends, is lowered vertically into a liquid:
  - If $\theta < 90^o$, the level inside the tube will rise
  - If $\theta = 90^o$, the level inside the tube will not change
  - If $\theta > 90^o$, the level inside the tube will drop

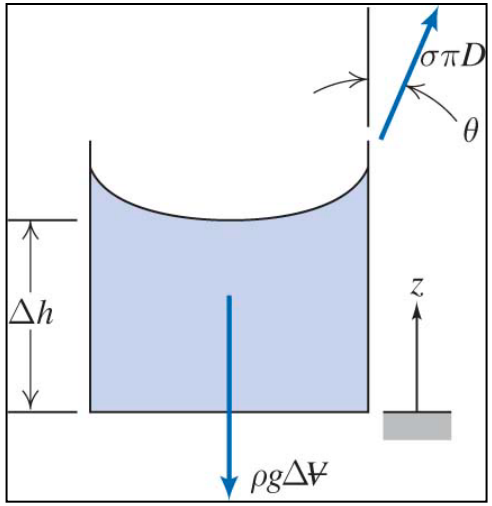

- Why?
  - Upward "pull" due to surface tension: $F_\sigma = \sigma \cos\theta_{\lg} \left(2\pi r_{capillary}\right)$
  - Downward "pull" due to gravity: $F_g \cong \rho g \left(\pi r_{capillary}^2 \Delta h\right)$
  - At equilibrium: $F_\sigma = F_g$

$$\boxed{\Delta h = \frac{2\sigma_{\lg} \cos\theta}{\rho g r_{capillary}}}$$

Review Example 2.3 in the textbook!!

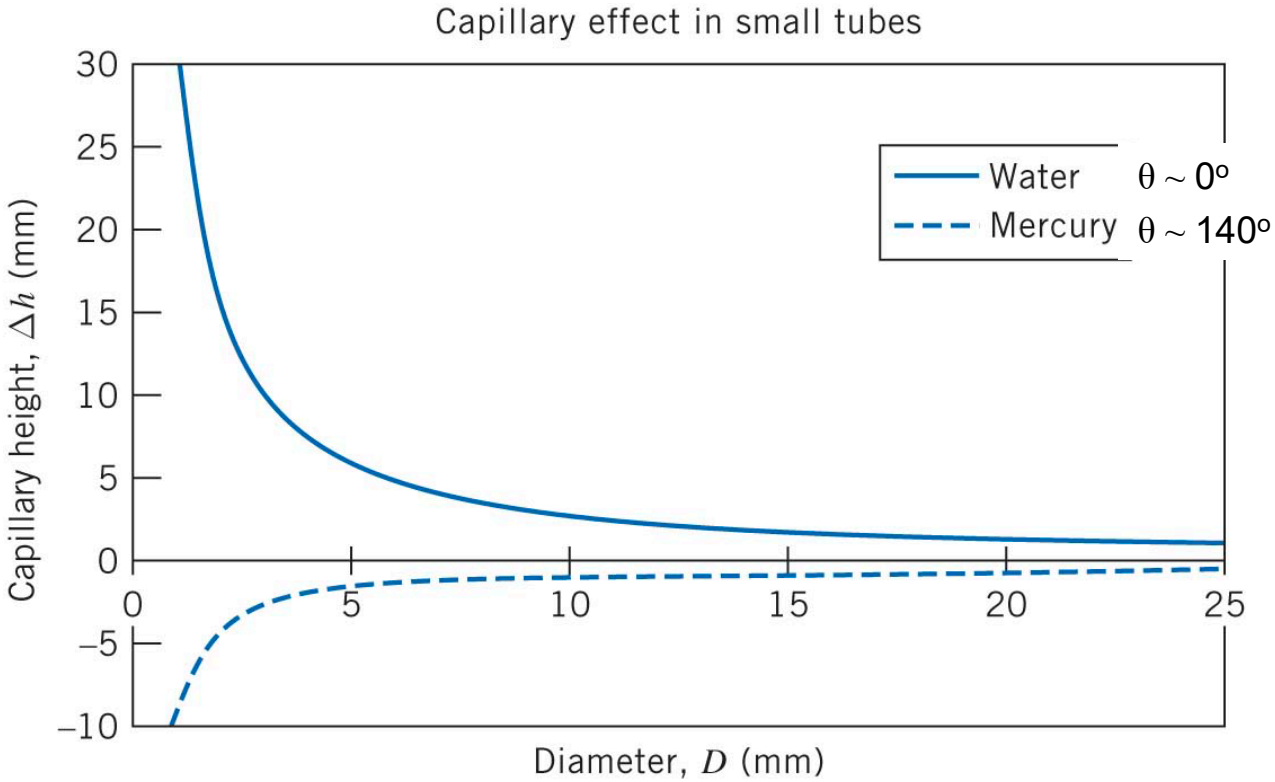

'Capillarity'

Review Example 2.3 in the textbook!!

- A small diameter tube, open at both ends, is lowered vertically into a liquid:
  - If $\theta < 90^o$, the level inside the tube will rise
  - If $\theta = 90^o$, the level inside the tube will not change
  - If $\theta > 90^o$, the level inside the tube will drop

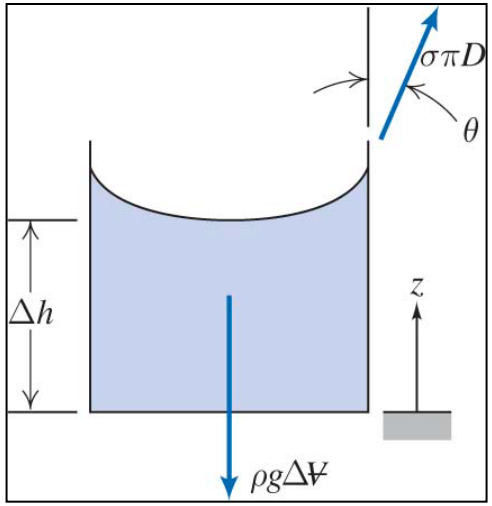

- Why?
  - Upward "pull" due to surface tension, F_σ: $F_\sigma = \left(\sigma_{\lg} \cos\theta\right) \cdot \left(2\pi r_{capillary}\right)$
  - Downward "pull" due to gravity, F_g: $F_g = \rho g \left(\pi r_{capillary}^2 \Delta h\right)$
  - At equilibrium: $F_\sigma = F_g$

$$\boxed{\Delta h = \frac{2\sigma_{\lg} \cos\theta}{\rho g r_{capillary}}}$$

What about temperature effects?

$$\Delta h = \frac{2\sigma \cos \theta_{\lg}}{\rho g r_{capillary}}$$

Table A.8

Properties of Water (SI Units)

Temperature, T (°C)	Density, ρ (kg/m^3)	Dynamic Viscosity, μ (N · s/m^2)	Kinematic Viscosity, ν (m^2/s)	Surface Tension, σ (N/m)	Vapor Pressure, p_v (kPa)	Bulk Modulus, E_v (GPa)
0	1000	1.76E-03	1.76E-06	0.0757	0.661	2.01
5	1000	1.51E-03	1.51E-06	0.0749	0.872	
10	1000	1.30E-03	1.30E-06	0.0742	1.23	
15	999	1.14E-03	1.14E-06	0.0735	1.71	
20	998	1.01E-03	1.01E-06	0.0727	2.34	2.21
25	997	8.93E-04	8.96E-07	0.0720	3.17	
30	996	8.00E-04	8.03E-07	0.0712	4.25	
35	994	7.21E-04	7.25E-07	0.0704	5.63	
40	992	6.53E-04	6.59E-07	0.0696	7.38	
45	990	5.95E-04	6.02E-07	0.0688	9.59	
50	988	5.46E-04	5.52E-07	0.0679	12.4	2.29
55	986	5.02E-04	5.09E-07	0.0671	15.8	
60	983	4.64E-04	4.72E-07	0.0662	19.9	
65	980	4.31E-04	4.40E-07	0.0654	25.0	
70	978	4.01E-04	4.10E-07	0.0645	31.2	
75	975	3.75E-04	3.85E-07	0.0636	38.6	
80	972	3.52E-04	3.62E-07	0.0627	47.4	
85	969	3.31E-04	3.41E-07	0.0618	57.8	
90	965	3.12E-04	3.23E-07	0.0608	70.1	2.12
95	962	2.95E-04	3.06E-07	0.0599	84.6	
100	958	2.79E-04	2.92E-07	0.0589	101	

Ideal gases

Eqn 3.6 $\frac{dP}{dz} = -\rho g$

Starting from the 'ideal gas law' derive the equation given below:

$$PV = nR_U T$$

$$\rho_{gas} = \frac{P \cdot M_W}{R_U \cdot T}; \; R_U = 8.314 \frac{m^3 \cdot Pa}{mol \cdot K}$$

Ideal gases

Be VERY careful with equation 1.1 in textbook:

$$\rho_{gas} = \frac{P}{R \cdot T}$$

Specific gas constant (Table A6)

$$R \equiv {}^{R_U}/_{M_W}$$

Table A.6

Thermodynamic Properties of Common Gases at STP[a]

Gas	Chemical Symbol	Molecular Mass, M_m	R^b $\left(\frac{J}{kg \cdot K}\right)$	c_p $\left(\frac{J}{kg \cdot K}\right)$	c_v $\left(\frac{J}{kg \cdot K}\right)$
Air	—	28.98	286.9	1004	717.4
Carbon dioxide	CO_2	44.01	188.9	840.4	651.4
Carbon monoxide	CO	28.01	296.8	1039	742.1
Helium	He	4.003	2077	5225	3147
Hydrogen	H_2	2.016	4124	14,180	10,060
Methane	CH_4	16.04	518.3	2190	1672
Nitrogen	N_2	28.01	296.8	1039	742.0
Oxygen	O_2	32.00	259.8	909.4	649.6
Steam[c]	H_2O	18.02	461.4	~2000	~1540

Source: Data from References [7, 16, 17].

[a]STP = standard temperature and pressure, $T = 15°C = 59°F$ and $p = 101.325$ kPa (abs) = 14.696 psia.

[b]$R \equiv R_u/M_m$; $R_u = 8314.3$ J/(kgmol · K) = 1545.3 ft · lbf/(lbmol · °R); 1 Btu = 778.2 ft · lbf.

[c]Water vapor behaves as an ideal gas when superheated by 55°C (100°F) or more.

Table A.10

Properties of Air at Atmospheric Pressure (SI Units)

Temperature, T (°C)	Density, ρ (kg/m^3)	Dynamic Viscosity, μ (N · s/m^2)	Kinematic Viscosity, ν (m^2/s)
0	1.29	1.72E-05	1.33E-05
5	1.27	1.74E-05	1.37E-05
10	1.25	1.76E-05	1.41E-05
15	1.23	1.79E-05	1.45E-05
20	1.21	1.81E-05	1.50E-05

$$\rho_{gas} = \frac{P \cdot M_W}{R_U \cdot T}$$

$$R_U = 8.314 \frac{m^3 \cdot Pa}{mol \cdot K}$$

$$\rho_{gas} = \frac{P}{R \cdot T}$$

$$R = 286.9 \frac{J}{kg \cdot K}$$

Answer = 1.21 kg/m^3

Ideal gases

Eqn 3.6 $$\frac{dP}{dz} = -\rho g$$

$$dP = -\left(\frac{M_W P}{R_U T}\right) g dz$$

Use separation of variables

For isothermal
(i.e. constant T)

$$P_2 = P_1 \exp\left[-\frac{g M_W}{R_U T}(z_2 - z_1)\right]$$

In-class example

From 2024 Midterm #1:

In the accompanying figure, the cross-section of a 3 m wide barge is shown – if the mass of the barge itself is 2,000 kg, calculate the draft (see accompanying figure for physical interpretation) when a 25,000 kg load is put inside the hold of the barge.

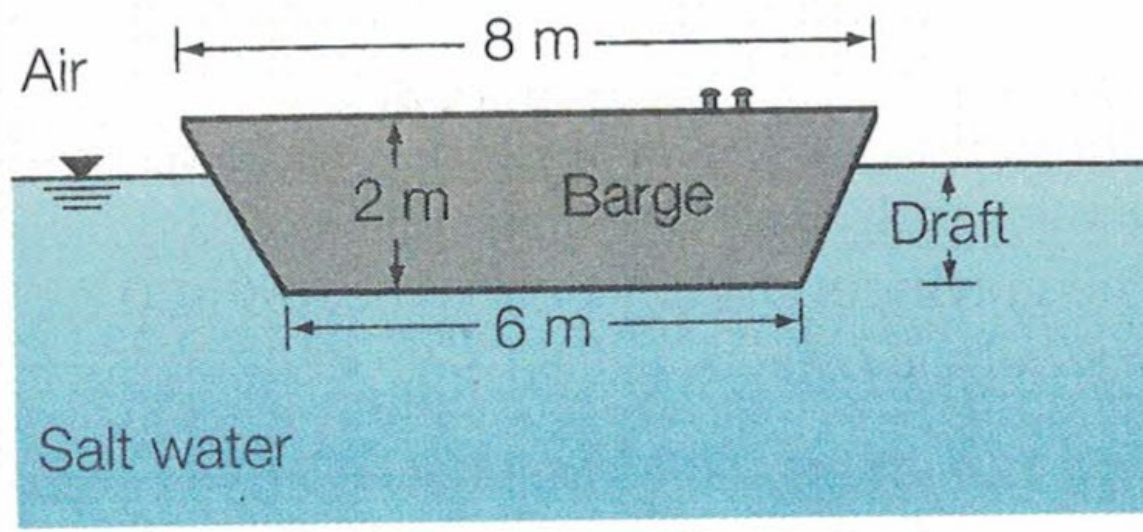

NOTE: The barge is essentially completely open on the inside and thus the buoyancy for the portion above the seawater surface is negligible.

Problems from textbook for self-study

10th Edition	9th Edition
2.21	2.41
2.31	2.67
2.33	2.72
3.2	3.1
3.4	3.4
3.6	3.5
3.10	3.15
3.20	3.36
3.40	3.69